IQ SYSTEM VEHICLE - STYLE A BATTERY CONFIGURATION

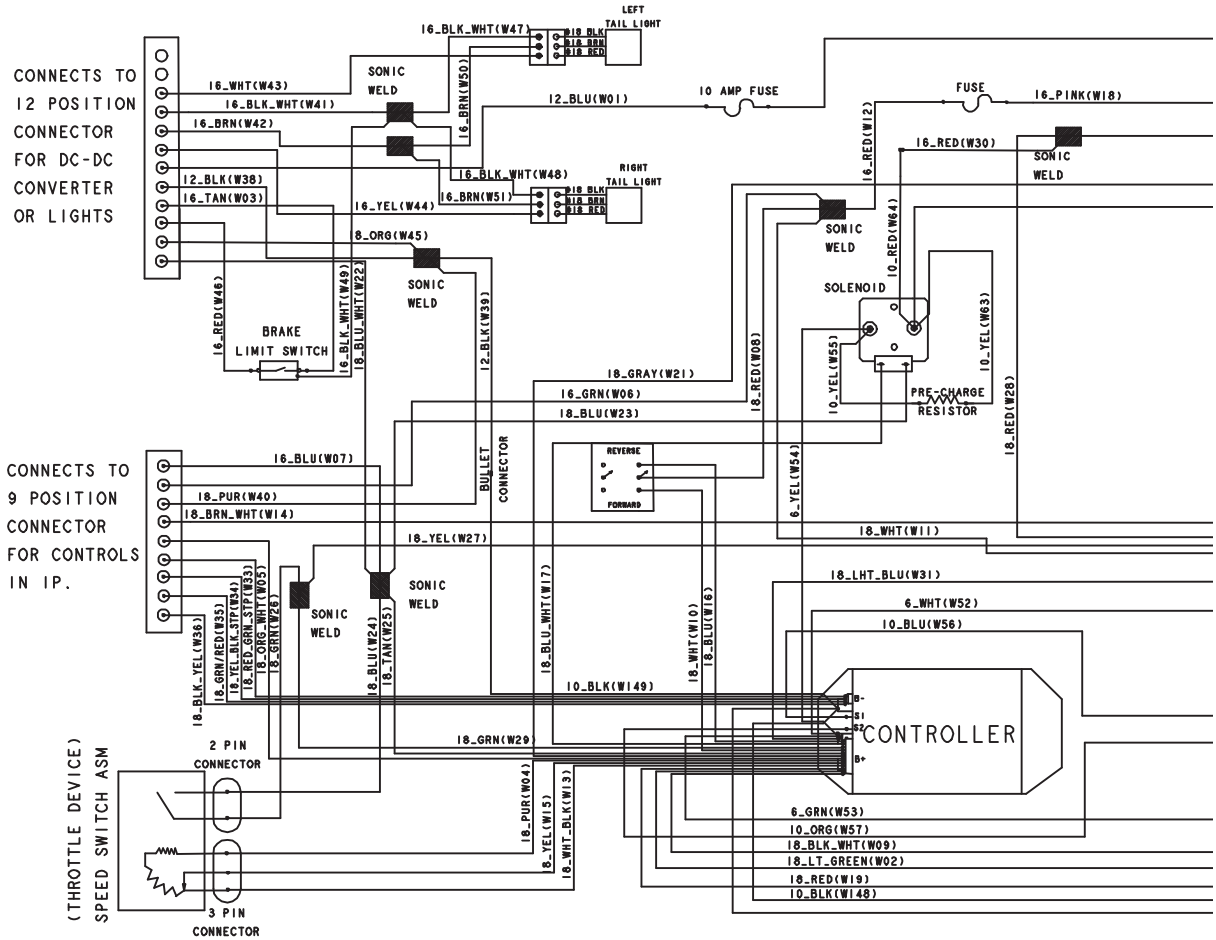

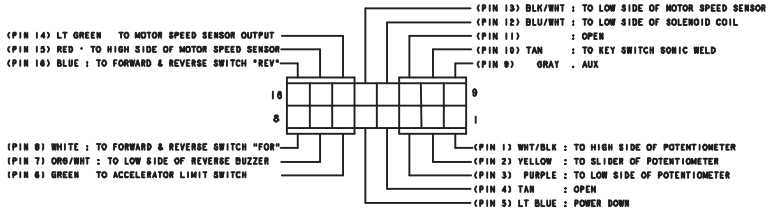

16 - PIN CONNECTOR AT CONTROLLER

000498-001

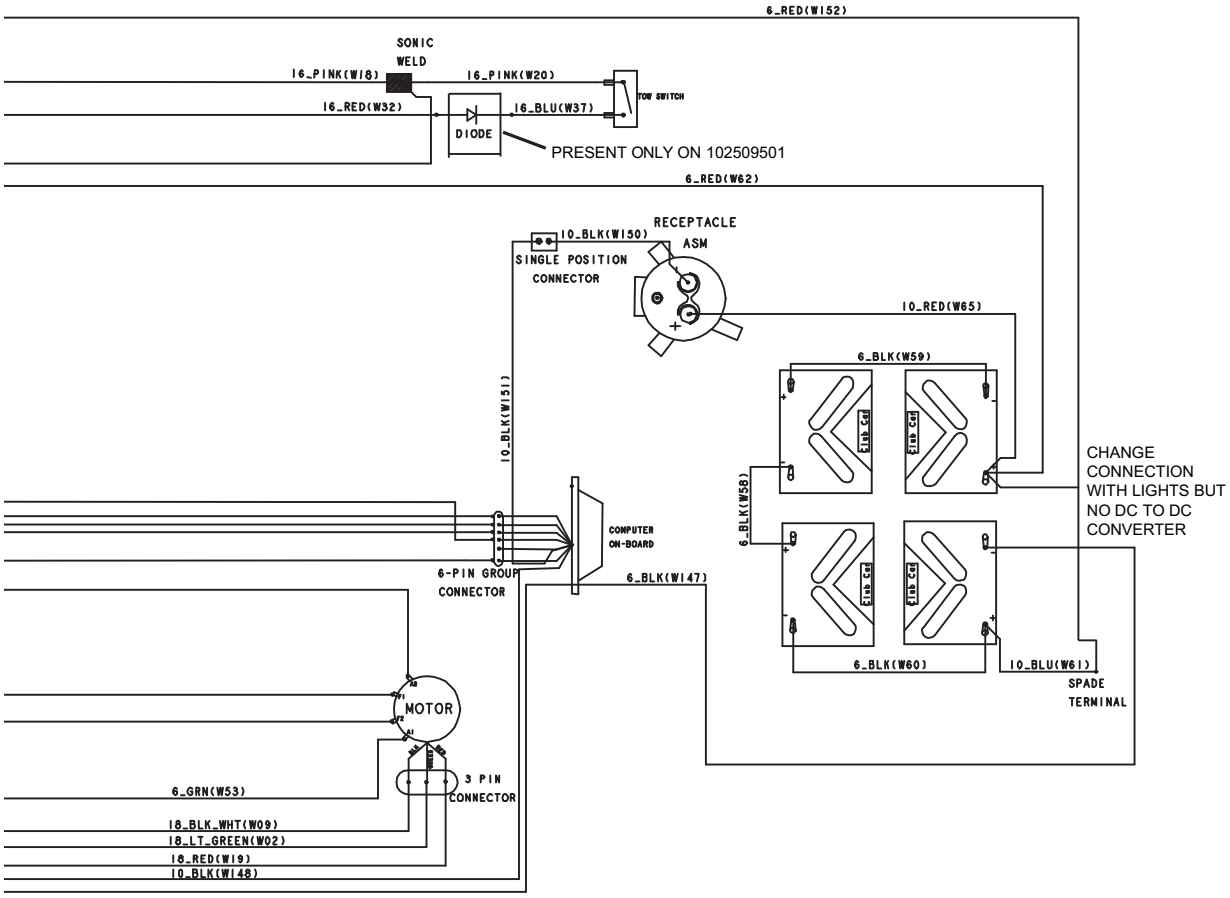

NOTE:
SOME WIRING / COMPONENTS SHOWN
ARE OPTIONAL ACCESSORIES

000498-001